GREEN POWER THROUGH INNOVATION

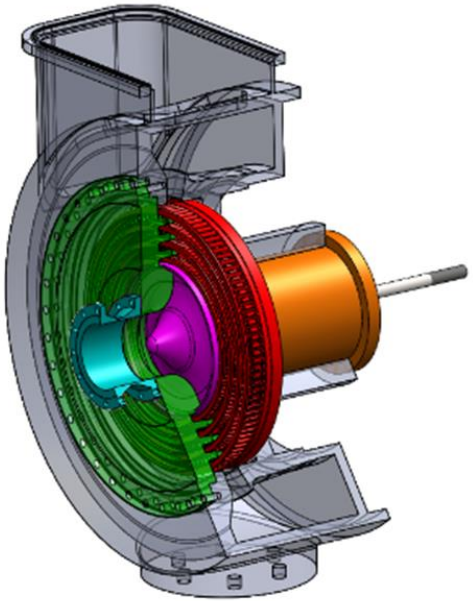

00/SUMMARY

- COMPANIES' PROFILE
- TECHNOLOGIES
- WHY CHOOSING TICA-EXERGY - SYNERGIES AND ADVANTAGES
- MARKET APPLICATIONS
- SERVICE
- REFERENCES

01/COMPANIE S PROFILE

01/TICA GROUP

ESTABLISHED IN 1991, TICA IS A PROFESSIONAL SOLUTION PROVIDER IN HVAC AND THERMAL UTILIZATION.

5 manufacturing bases and 8 factories

900 million $ turnover

2300 employees

70+ branch offices

01/TICA GROUP/ TICA THERMAL

UNITED TECHNOLOGIES (UTC), WITH HIGH REPUTATION FOR ITS PRATT & WHITNEY AIRCRAFT ENGINE , CARRIER CHILLER AND OTIS ELEVATOR , TRANSFERRED OR LICENSED WORLD LEADING TECHNOLOGIES SUCH AS ORGANIC RANKINE CYCLE (ORC) , CENTRIFUGE AND SCREW CHILLER TO TICA.

01/TICAGROUP / TICA THERMAL

Projects Portfolio Worldwide
100+ ORC Units
45 MWe Total

01/TICA GROUP/EXERGY

ON **25TH SEPTEMBER 2019**, TICA ACQUIRED EXERGY FROM THE ITALIAN MACCAFERRI INDUSTRIAL GROUP. IN LESS THAN 10 YEAR HISTORY, THANKS TO ITS PIONEERING TECHNOLOGY EXERGY HAS BECOME THE WORLD 2ND LARGEST ORC PROVIDER IN GEOTHERMAL APPLICATION WITH 441 MWe IN PORTFOLIO

01/ TICA GROUP/EXERGY

- PIONEERS AND **MOST REFERENCED** IN THE DESIGN AND SUPPLY OF **NEW GENERATION HIGH EFFICIENCY ORGANIC RANKINE CYCLE (ORC) SYSTEMS**

- THE UNIQUE DEVELOPER OF THE **RADIAL OUTFLOW TURBINE TECHNOLOGY**

- THE ORC PROVIDER WITH THE **FASTEST GROWTH** AND **MOST DISRUPTIVE TECHNOLOGY EVOLUTION** IN THE MARKET

- **A LEADING ORC SUPPLIER** WORLDWIDE WITH **475 MWe IN PORTFOLIO**

02/TECHNOLOGIES

02/TECHNOLOGIES/ORC WORKING PRINCIPLE

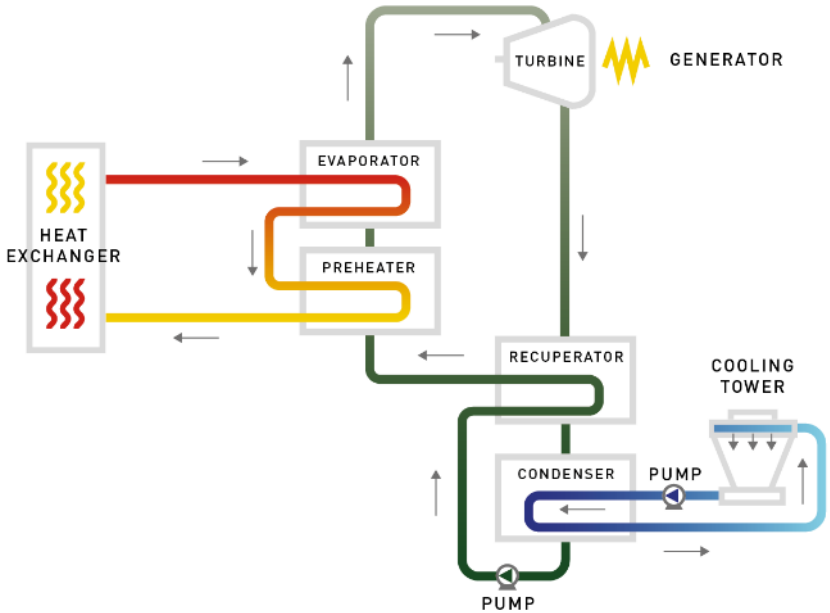

THE POWER SYSTEM CONVERTS LOW- AND MEDIUM-TEMPERATURE (80-340℃) HOT FLUIDS LIKE WATER INTO ELECTRICITY, BASED ON A THERMODYNAMIC CYCLE KNOWN AS THE **ORGANIC RANKINE CYCLE (ORC)**.

02/TECHNOLOGIES/TICA THERMAL

Power Pure Cycle 280

- 280KW STANDARD **MODULAR DESIGN**
- **STANDARDIZED** ASSEMBLY PROCESSES
- DELIVERED **FULLY INTEGRATED** AND **TESTED** IN TIGHTLY CONTROLLED FACTORY ENVIRONMENTS
- SHIPPED ON **STANDARD TRUCKING**
- **14 TO16 WEEK LEAD TIME** ON DELIVERIES

02/TECHNOLOGIES/TICA THERMAL

PURE CYCLE ADVANTAGES

- GREEN WORKING FLUID R245FA
- INTEGRATED DESIGN OF TURBINE-GENERATOR, LOW LEAKAGE RISK
- RADIAL IN-FLOW TURBINE (RIT) WITH HIGH SYSTEM EFFICIENCY
- MULTIPLE PROTECTION DESIGN WITH HIGH RELIABILITY
- MODULAR DESIGN WITH HIGH LEVEL INTEGRATION, SKID-MOUNTED STRUCTURE, EASY INSTALLATION
- AUTOMATIC TRACKING GRID PARAMETERS BY INDUCTION GENERATOR
- REMOTE CONTROL, ONE-KEY START-STOP

02/TECHNOLOGIES/ TICA THERMAL IP

50 REGISTERED PATENTS

30 NEW PATENTS IN APPLICATION

20 COPYRIGHTS

02/ TECHNOLOGIES/EXERGY/THE ROT

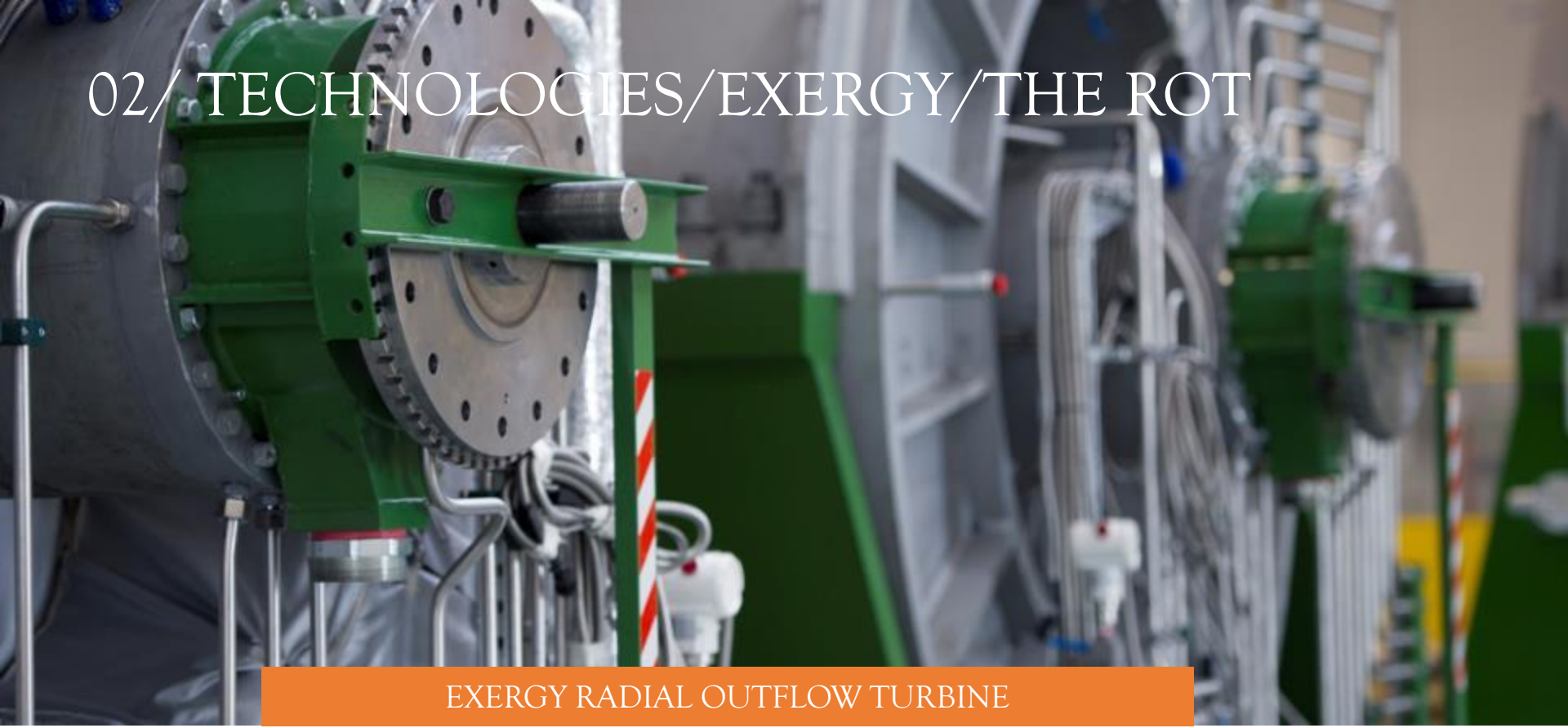

EXERGY RADIAL OUTFLOW TURBINE

- CONCEPTUALIZED BY EXERGY FOUNDER CLAUDIO SPADACINI THE **RADIAL OUTFLOW TURBINE (ROT) IS UNIQUE IN THE ORC MARKETPLACE.**
- THE RADIAL OUTFLOW TURBINE IS THE **HIGHEST EFFICIENCY** TURBINE AVAILABLE ON THE ORC MARKET

02/TECHNOLOGIES/EXERGY/THE ROT

ROT ADVANTAGES

- RADIAL DEVELOPMENT OF THE STAGES

MATCH BETWEEN VOLUMETRIC FLOW AND CROSS SECTION

- HIGHER NUMBER OF STAGES (6+)

HIGHER ISENTROPIC EFFICIENCY PER STAGE
BETTER OFF-DESIGN PERFORMANCE

- LOW SPEED (DIRECT DRIVE)

LOW NOISE AND VIBRATIONS

- SINGLE-DISK, OVERHUNG CONFIGURATION

ENHANCED COMPONENTS ACCESSIBILITY
POSSIBILITY FOR MULTIPLE ADMISSIONS ON ONE DISK

- BUILT-IN MECHANICAL GROUP EXTRACTION SLIDE

REDUCED DOWNTIMES

02/TECHNOLOGIES/EXERGY/THE ROT

Feature	Radial Inflow	Axial	Radial Outflow
Number of stages	1	up to 5	up to 9
Off-design performance	IGV		Large number of stages
Rotational speed	High speed Gearbox	Low speed Direct drive	Low speed Direct drive
Design complication	IGV, twisted blades	Twisted blades	Straight blades
Turbine inlet pressure	up to 40 bara	10-15 bara	10-15 bara
Cycle type	Supercritical/Superheated	Saturated	Saturated
Working fluid availability on the market	Tipically R134a/R245fa	nPentane	nPentane, iPentane
Turbine cost			Reduced number of parts
Turbine isoentropic efficiency	up to 87%	up to 86%	Up to 90%

02/ TECHNOLOGIES/EXERGY/MECHANICAL GROUP

- **PATENTED TECHNOLOGY** THAT ALLOWS TO REMOVE THE MECHANICAL GROUP WITHOUT ANY FLUID DRAINAGE OR LOSS.
- THE BUILT-IN MECHANICAL GROUP CAN BE EXTRACTED TO FACILITATE AND MAINTAIN A **LONGER LIFE OF THE BEARINGS.**
- THE ENTIRE OPERATION CAN BE **COMPLETED IN ABOUT 4 HOURS**

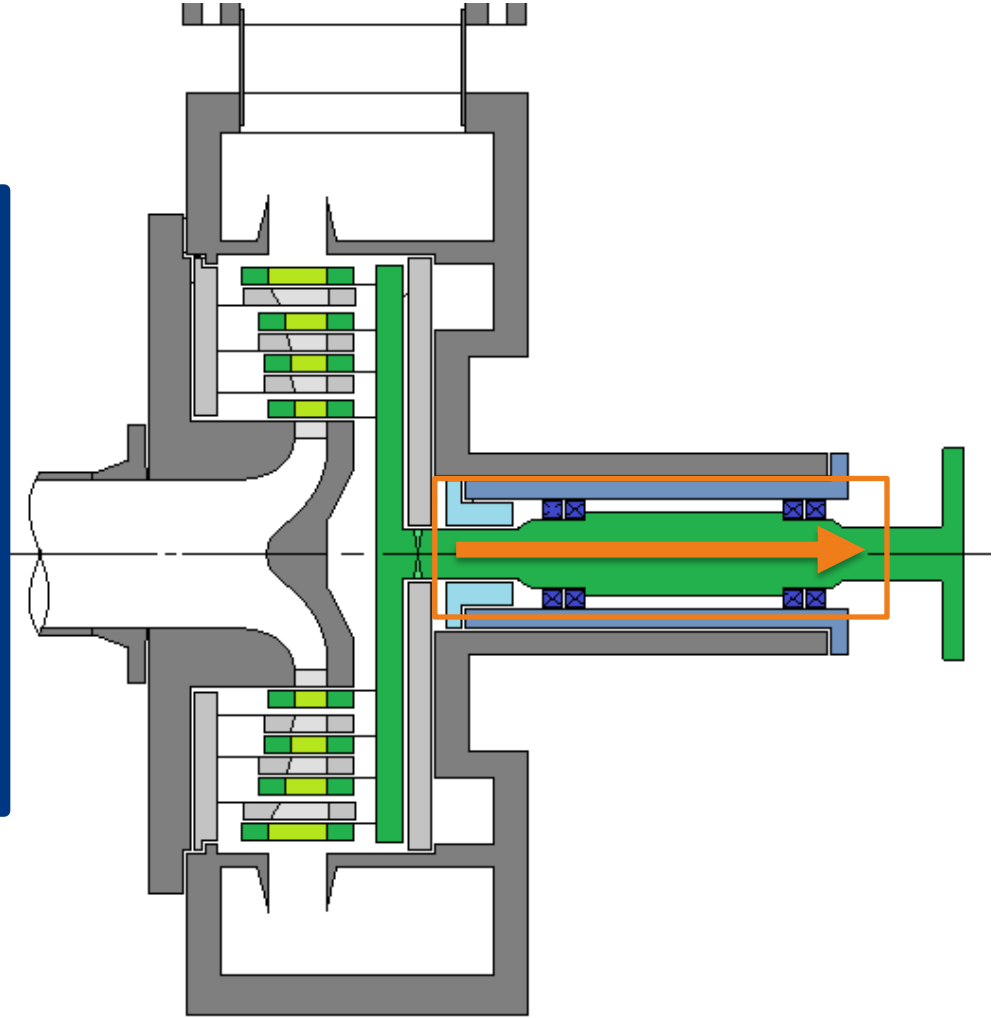

02/ EXERGY/ IP RIGHTS

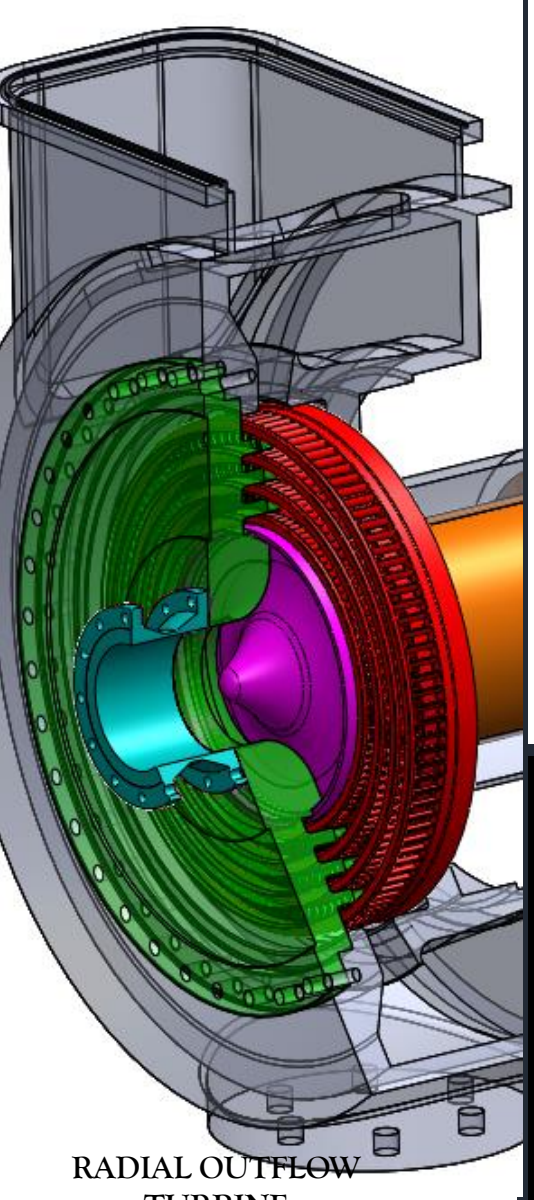

RADIAL OUTFLOW TURBINE

89 GRANTED PATENTS IN DIFFERENT REGIONS WORLDWIDE

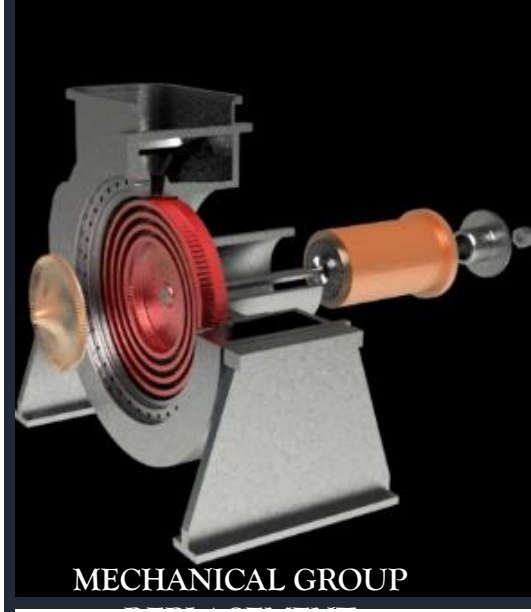

MECHANICAL GROUP

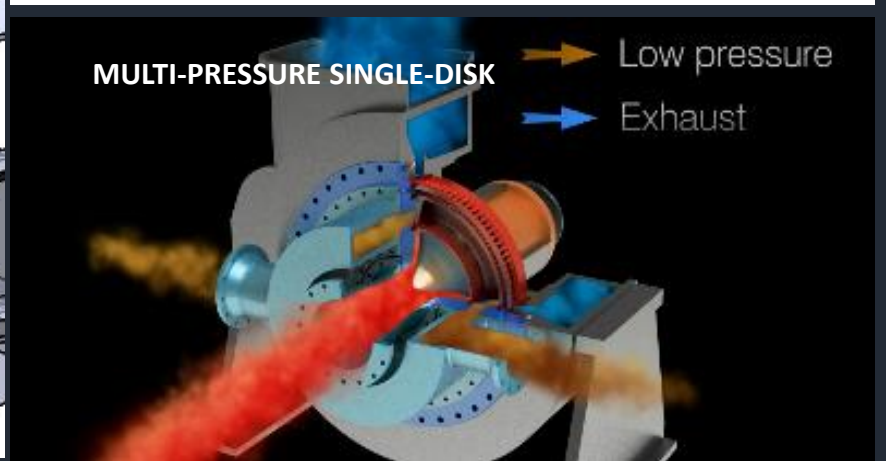

20 PATENTS UNDER APPLICATION WORLDWIDE

03/WHY CHOOSING TICA-EXERGY

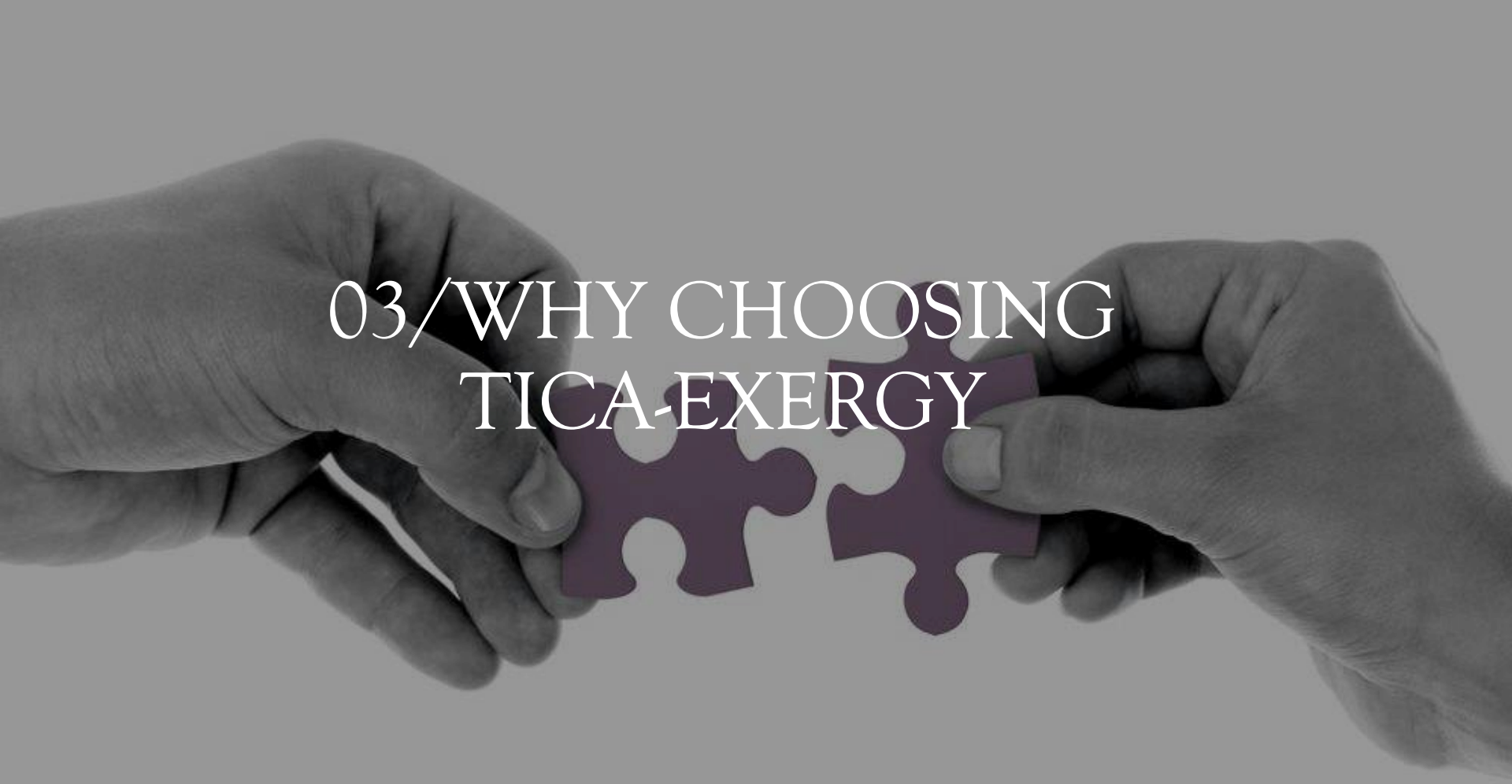

03/WHY CHOOSING TICA-EXERGY

TICA® EXERGY TICA EXERGY

280 kW units

1-5 MW units

+

1 MW up to tailored units of 28 MW each

=

From 280 kW up to tailored power plants

A BROAD ARRAY OF SOLUTIONS TO SATISFY ANY CUSTOMERS' NEED FOR EITHER SMALL STANDARDIZED UNITS FOR POWER GENERATION FROM LOW TEMPERATURE WASTE HEAT OR BESPOKE POWER PLANTS FOR HIGHER POWER SIZE

03/WHY CHOOSING TICA-EXERGY

MOVED BY SHARED VALUES OF **BUSINESS INTEGRITY, CUSTOMER FOCUS, QUALITY FIRST** AND **TEAMWORKING** TO PROVIDE EFFECTIVE SOLUTIONS FOR SUSTAINABLE BUSINESSES

OFFERING A **GLOBAL SERVICE** THANKS TO OPERATION CENTERS, WORKSHOPS AND PRESENCE IN ALL INTERNATIONAL MARKETS (CHINA AND FAR EAST-EUROPE-AMERICAS)

HAVING **IN HOUSE COMPREHENSIVE TECHNICAL SKILLS** IN **ENGINEERING** AND **POWER PLANT DESIGN** THANKS TO EXERGY'S EXTENSIVE KNOW HOW

HAVING **IN HOUSE MANUFACTURING CAPACITY** LEVEREGING ON TICA'S STRONG MANUFACTURING SKILLS. GREATER

INTERNAL COLLABORATION AND CONTROLS AT EVERY STEP OF THE PROCESS AND SHORTER DELIVERY TIMES

BEING R&D AND PRODUCT DEVELOPMENT ORIENTED AS IN THE DNA OF BOTH COMPANIES WITH MORE THAN **150 COMBINED REGISTERED PATENTS WORLDWIDE**

BEING **WELL REFERENCED IN NEW GENERATION HIGH-EFFICIENCY** POWER PLANTS SYSTEMS

04/MARKET APPLICATIONS

04/ MARKET APPLICATIONS

RENEWABLES

GEOTHERMAL

BIOMASS

CSP

WHR

STEEL

CEMENT

CHEMICAL

04/APPLICATION - GEO

- KIND OF GEOTHERMAL RESOURCES:
  - STEAM ONLY
  - MIXED STEAM AND LIQUID
  - LIQUID ONLY
- RANGE OF PLANT CONFIGURATION:
  - ORC ONLY
  - ORC BOTTOMING OF STEAM TURBINE
  - WELL-HEAD GENERATORS

04/ MARKET APPLICATIONS/GEO

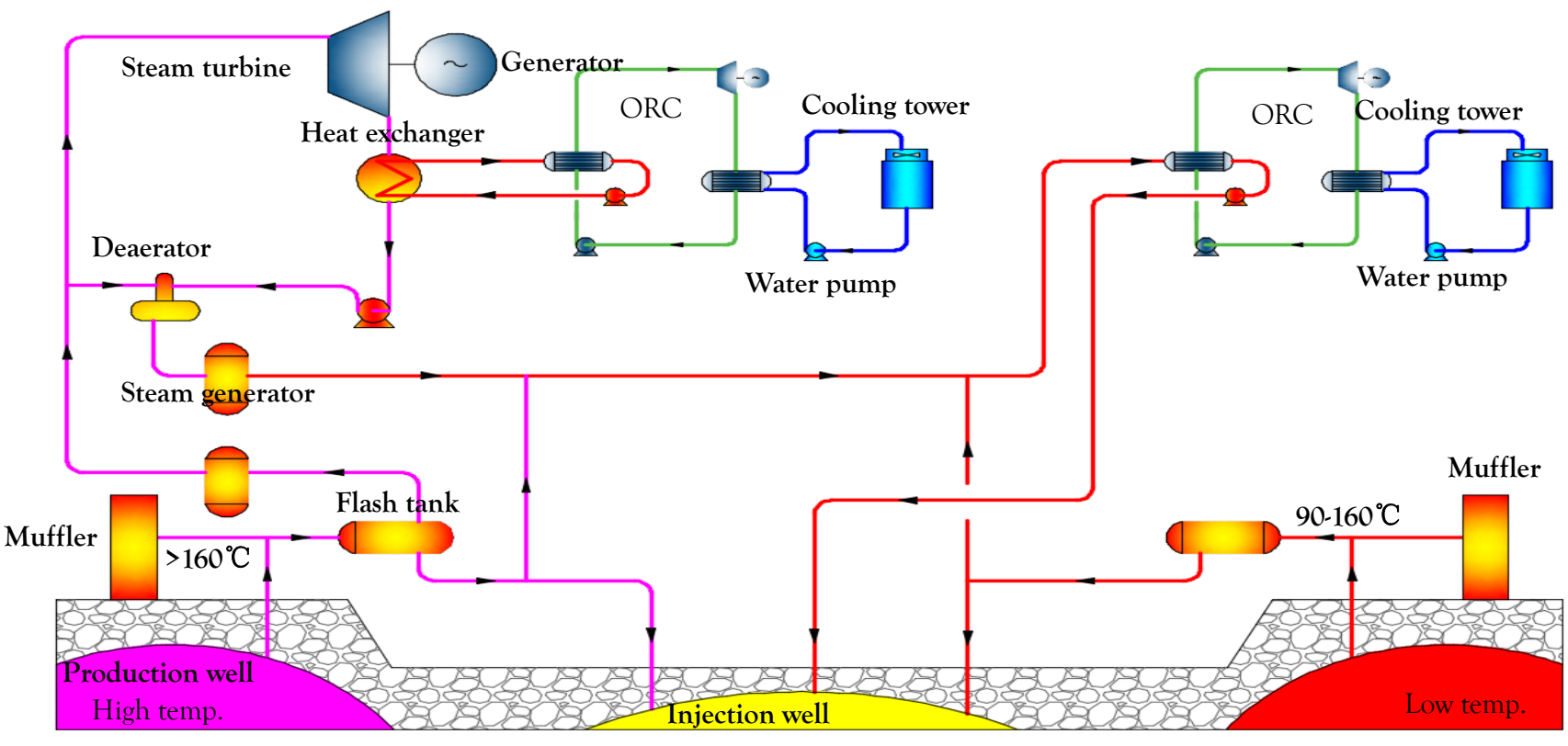

04/MARKET APPLICATIONS/GEO

EXERGY BINARY PLANT ADVANTAGES

- **COST EFFECTIVE** CONFIGURATION
- **SUPERIOR EFFICIENCY**
- **HIGH FLEXIBILITY** IN OFF DESIGN CONDITIONS
- **MULTIPLE PRESSURE LEVEL** PLANT WITH **SINGLE TURBINE DISK**
- **BETTER EXPLOITATION** OF **HIGH ENTHALPY RESOURCES**
- SUITABLE FOR **LOW TEMPERATURE SOURCES** > 90°C
- GEOTHERMAL FLUID DOES NOT TOUCH THE TURBINE
- **LOW MAINTENANCE**

04/MARKET APPLICATIONS/GEO

EXERGY's GEO TECHNICAL ACHIEVEMENT

- **EXTENSIVE KNOW HOW** IN GEOTHERMAL POWER PLANT DESIGN WITH THE **SECOND LARGEST GEOTHERMAL BINARY FLEET WORLDWIDE**
- **IN HOUSE TECHNICAL EXPERTISE** TO DEVELOP **TAILORED SOLUTIONS** IN TERMS OF CYCLE AND TURBOMACHINERY DESIGN ACCORDING
- **REFERENCES** WITH THE BIGGEST ORC TURBINES IN OPERATION IN THE MARKET (20 MWe)
- **FIRST REFERENCE IN THE WORLD**, MULTI AWARD WINNING **POWER PLANT HIGH PERFORMANCE** DESIGN WITH TWO PRESSURE LEVEL ON A SINGLE TURBINE DISK (TOSUNLAR 1 client: AKCA ENERJI)
- **PROVEN** TECHNOLOGY AND PERFORMANCE at **99% AVAILABILITY**

04/MARKET APPLICATIONS/EXERGY PERFORMANCE

OVER 98.5% AVAILABILITY IN ALL THE TRACKED UNITS, AVERAGE 99.2%

SITE	CUSTOMER	OPERATION YEAR	TEMPERATURE	OUTPUT GROSS	AVAILABILITY
Saraykoy 5	Greeneco Enerji	2019	170°C	28 MW	99.6 %
Saraykoy 4	Greeneco Enerji	2018	150°C	12 MW	99.0 %
Kuyucak	Turcas	2017	155°C	18 MW	99.0 %
Kubilay	Bestepeler Enerji	2016	139°C	27 MW	99.3 %
Karkey-Umurlu 2	Karadeniz Holding	2016	145°C	12 MW	99.8 %
Mehmet Han	Kipas Holding	2016	160°C	25 MW	99.9 %
Ken Kipas	Kipas Holding	2016	172°C	25 MW	99.6 %
Karkey-Umurlu I	Karadeniz Holding	2015	145°C	12 MW	99.3 %
Saraykoy 1	Greeneco Enerji	2015	135°C	12 MW	99.3 %
Denizli - Tosunlar	Akca Enerji	2014	105°C	3.5 MW	99.8 %
Bagnore	Enel Green Power	2012	150°C	1 MW	99.3 %

04/ MARKET APPLICATIONS/ HEAT RECOVERY

INDUSTRIAL

- CEMENT FACTORIES
- STEEL MILLS
- GLASS MILLS
- FURNACES

OIL & GAS

- INTERNAL COMBUSTION ENGINES
- GAS TURBINES
- COMPRESSOR STATIONS

04/ MARKET APPLICATIONS/ HEAT RECOVERY

ADVANTAGES

- **COMPETITIVE** CAPITAL COSTS
- **HIGH EFFICIENCY** AT A VARIETY OF OPERATING TEMPERATURES AND LOADS
- **FAST START UP** AND **SHUT DOWN**
- **AUTOMATED** OPERATION
- **NO WATER** TREATMENT OR MAKE UP
- **FLEXIBLE** PLACEMENT
- **REDUCTION** OF THE PLANT **ENERGY CONSUMPTION** AND **CARBON FOOTPRINT**, IN THE CASE OF INDUSTRIAL PROCESSES

04/ MARKET APPLICATIONS/ HR STEEL

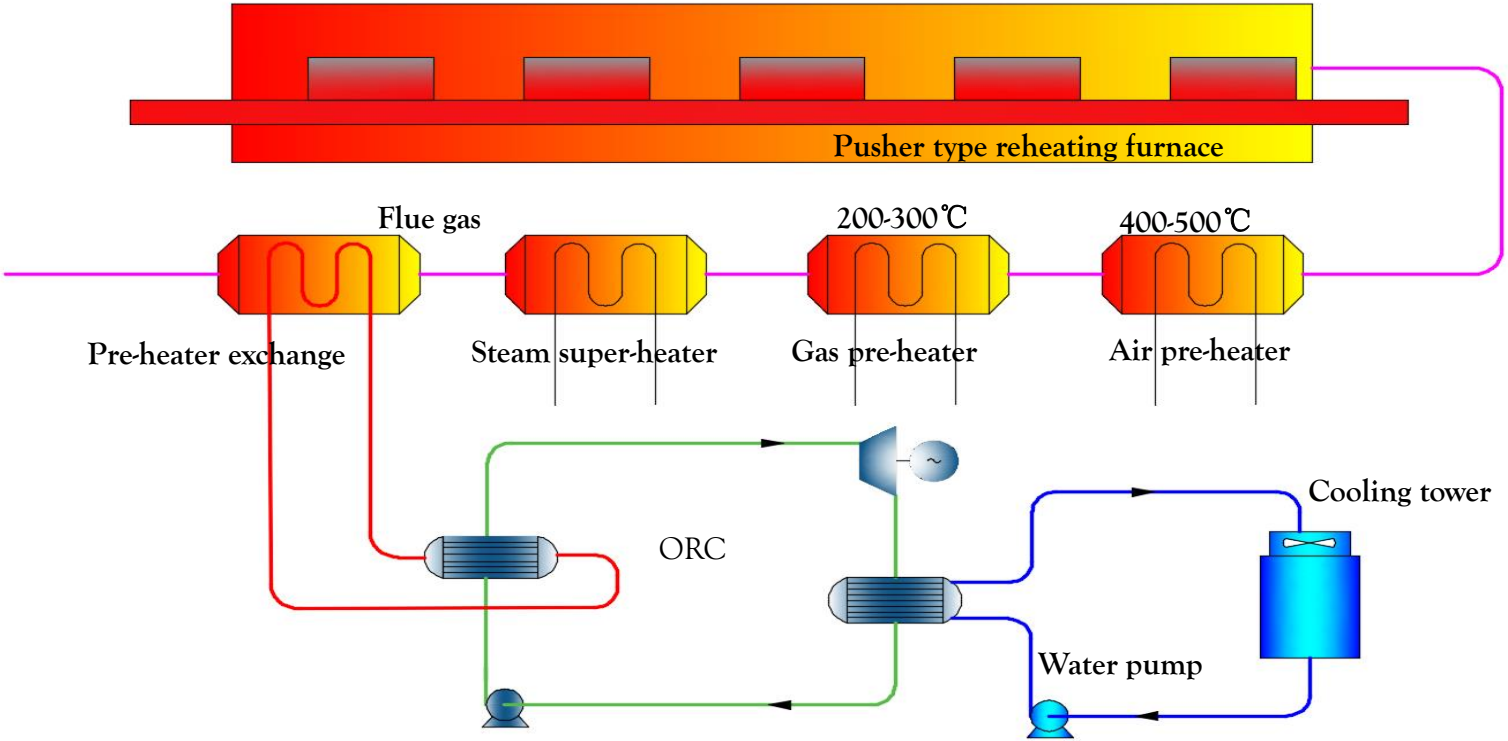

HEAT SOURCES

1. blast furnace waste heat exchanging to hot water/ steam
2. rolling mill waste heat exchanging to hot water/ steam

04/ MARKET APPLICATIONS/ HR CEMENT

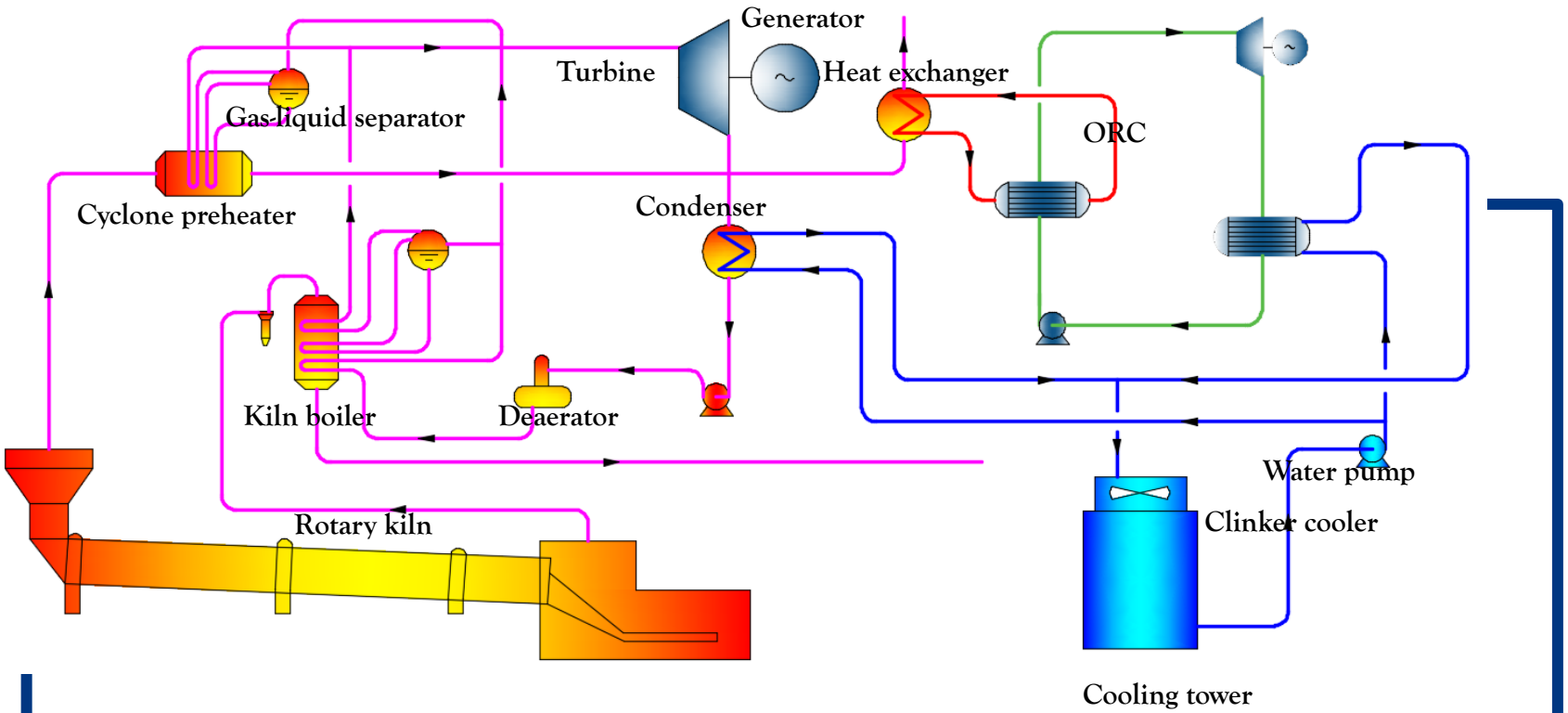

HEAT SOURCE: hot water/ steam from flue gas heat exchanger or kiln boiler Heat

04/ MARKET APPLICATIONS/ HR CHEMICAL

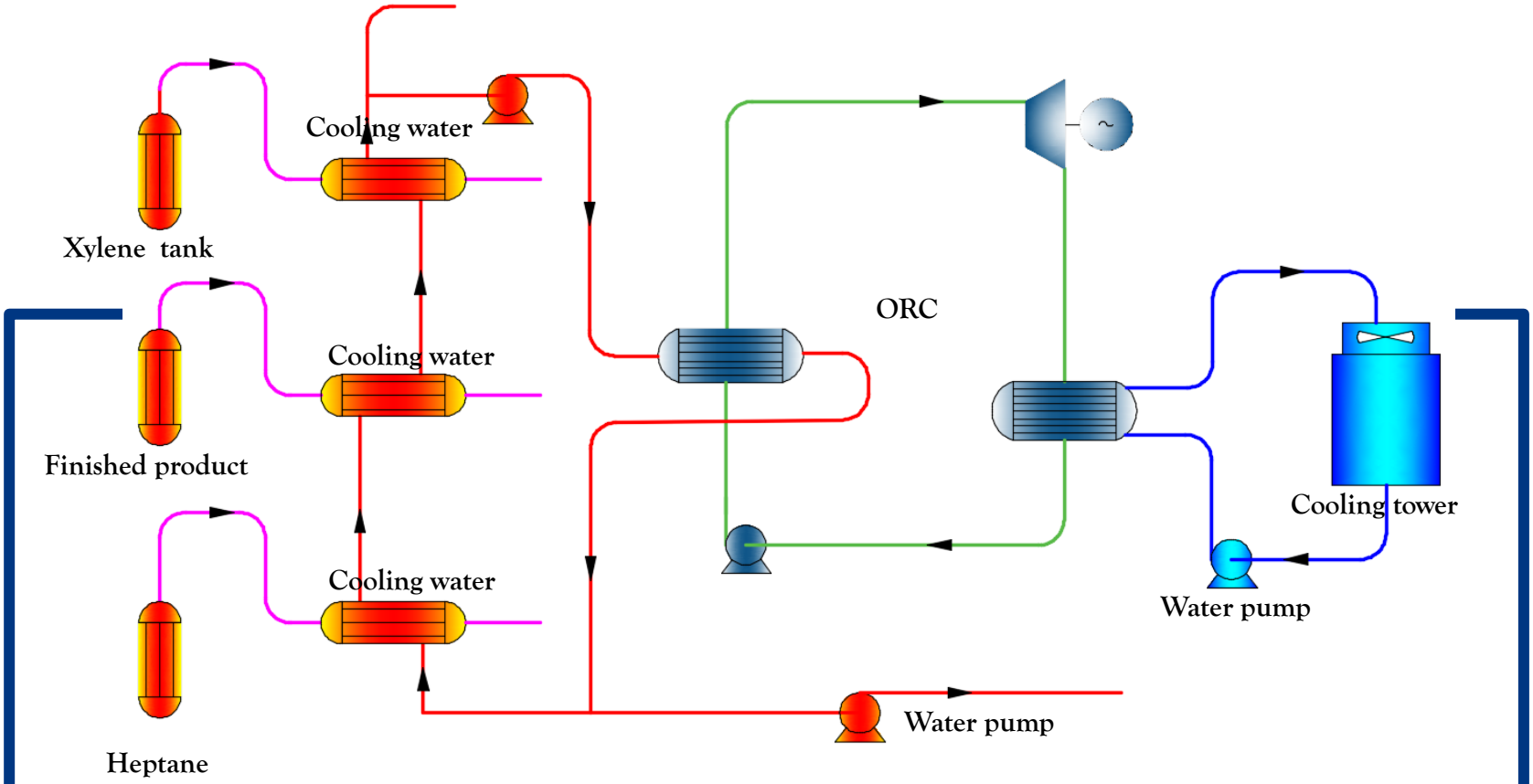

HEAT RESOURCE: hot water/ steam from cooling process or flue gas heat exchanger

04/ MARKET APPLICATIONS/ BIOMASS

ADVANTAGES

- **GOOD COMPROMISE** BETWEEN INVESTMENT COST AND EFFICIENCY
- **HIGH RELIABILITY** THANKS TO PROVEN TECHNOLOGY
- **HIGH FLEXIBILITY** IN BIOMASS FEED QUALITY
- **HIGH MODULARITY** AND SIMPLE INSTALLATION
- **FEW CIVIL WORKS** REQUIRED

04/ MARKET APPLICATIONS/ BIOMASS

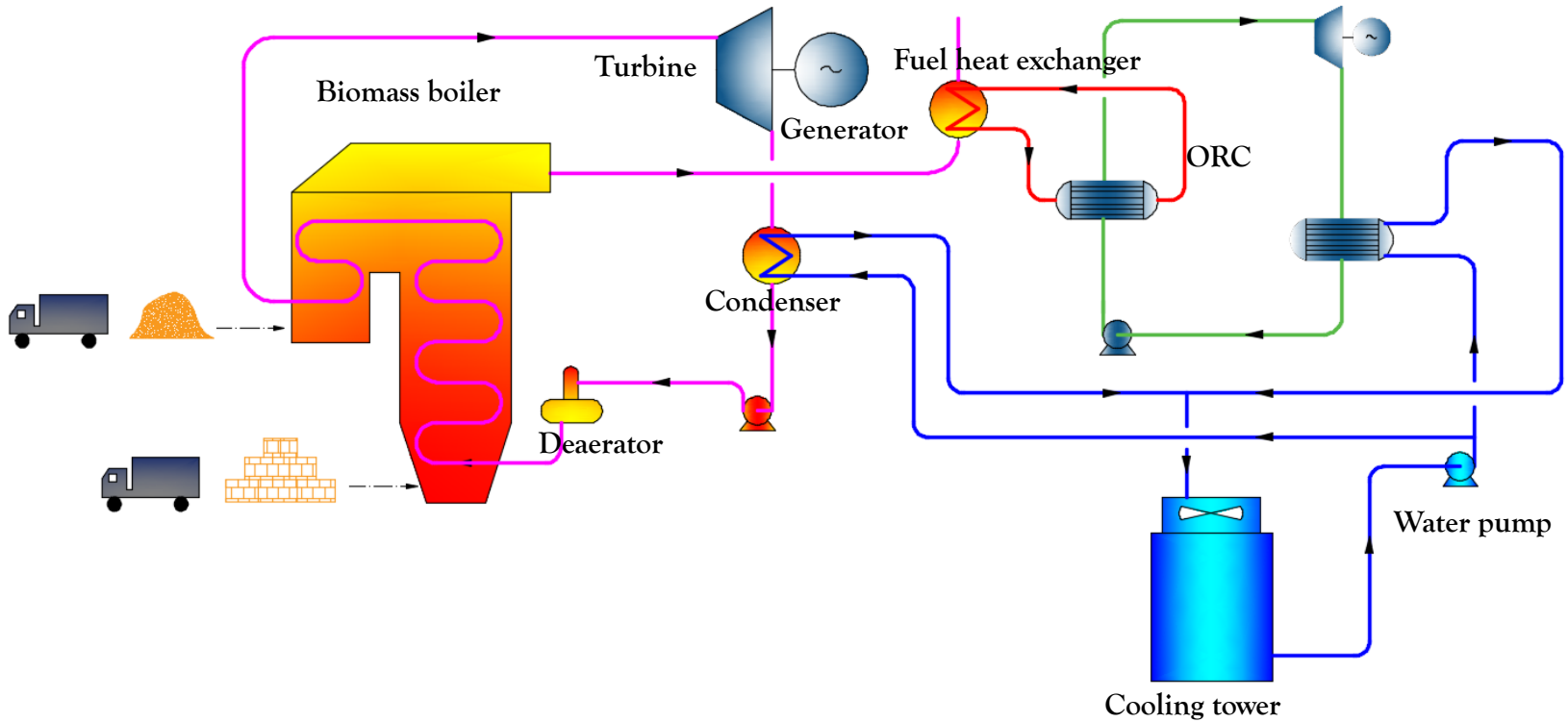

HEAT RESOURCE: hot water/ steam/ thermal oil from biomass boiler with temp. about 150℃ to 340℃

04/ MARKET APPLICATIONS/ CSP

ADVANTAGES

- **HIGH LEVEL OF EFFICIENCY** FOR CONVERTING THE THERMAL ENERGY COLLECTED BY SOLAR PANELS INTO ELECTRICITY
- **COST EFFICIENT** SOLUTION
- **LOWER OVERALL SYSTEM COST** THANKS TO THE REDUCTION OF THE REFLECTORS USED

04/ MARKET APPLICATIONS/ CSP

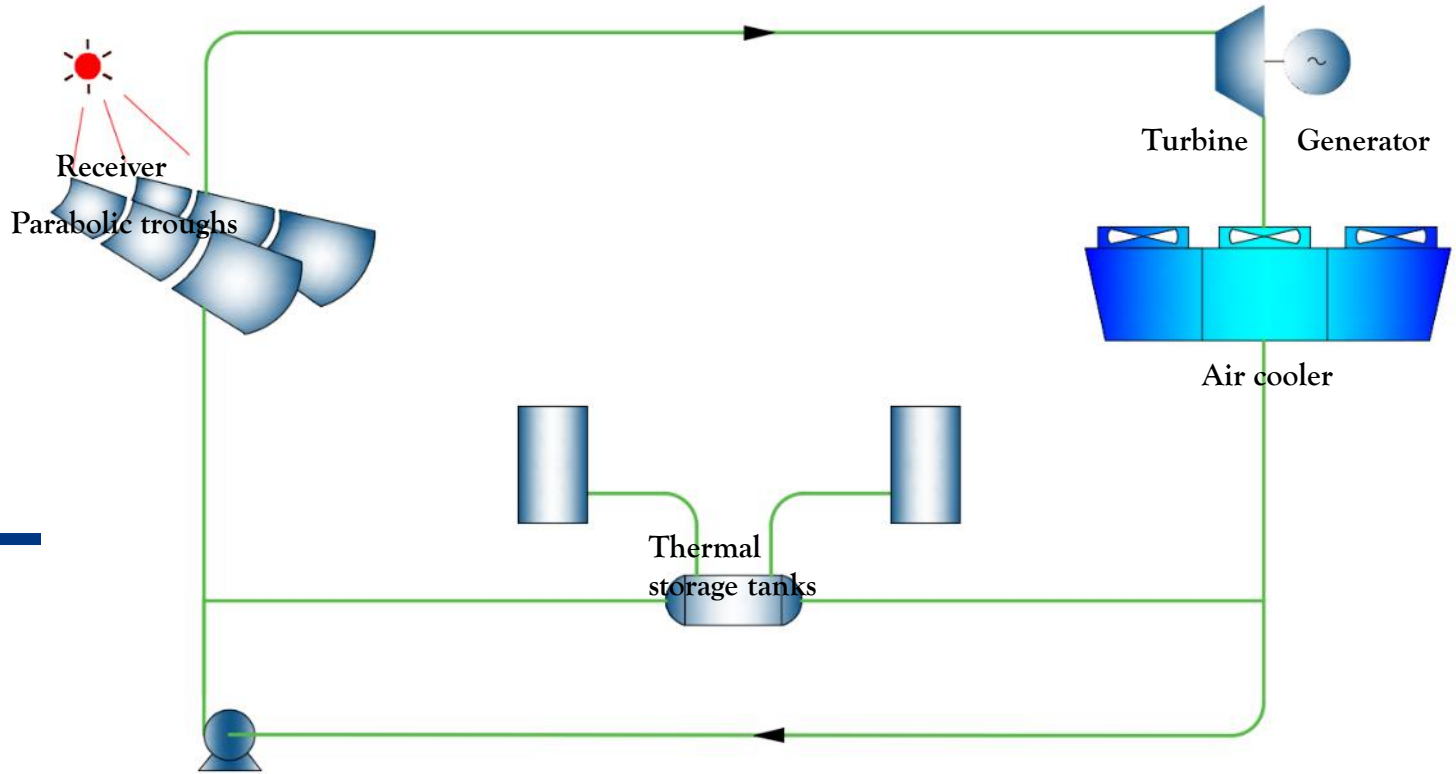

HEAT SOURCE: hot water /steam / thermal oil heated by stored thermal energy with various temperature

05/SERVICE

05/SERVICE

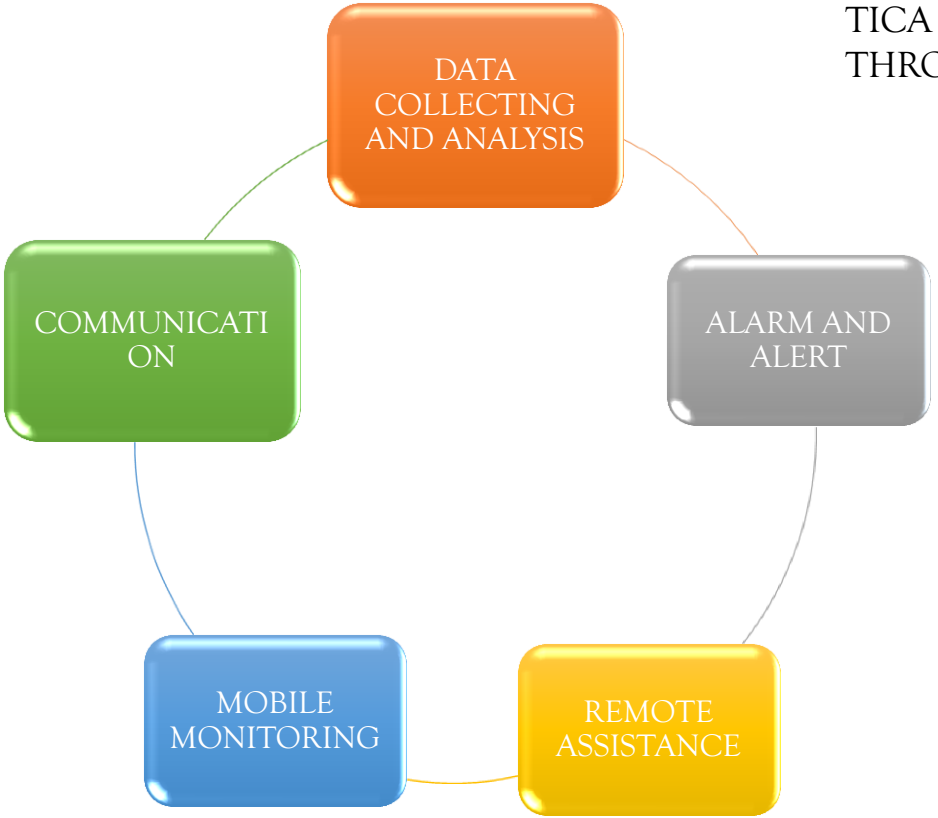

TICA AND EXERGY SERVICE OFFER 24/7 SUPPORT THROUGH REMOTE MONITORING SYSTEMS

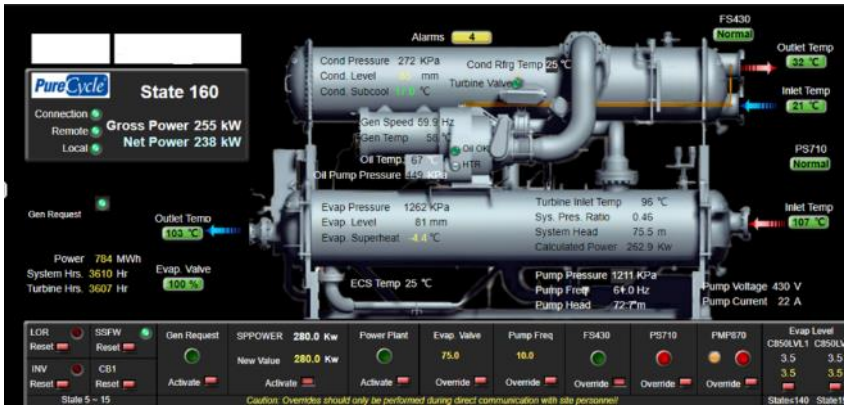

06/REFERENCES

BEŞTEPELER ENERJI,

EXERGY

KUBILAY 1, TURKEY

YEAR: 2015
APPLICATION:GEO
POWER: 24 MW

TBK TURCAS

KUYUCAK

YEAR: 2016
APPLICATION:GEO
POWER: 18 MW

EXERGY

PTT LNG,
RAYONG,
THAILAND

EXERGY

YEAR: 2017
APPLICATION:HR
POWER: 5MW

SISECAM
TARGOVISHTE,
BULGARIA

EXERGY

YEAR: 2014
APPLICATION:HR
POWER: 4MW

GREENECO
SARAYKOY,
TURKEY

APPLICATION: GEO
POWER: 104MW

TICA EXERGY

498.82 MW
76 Plants

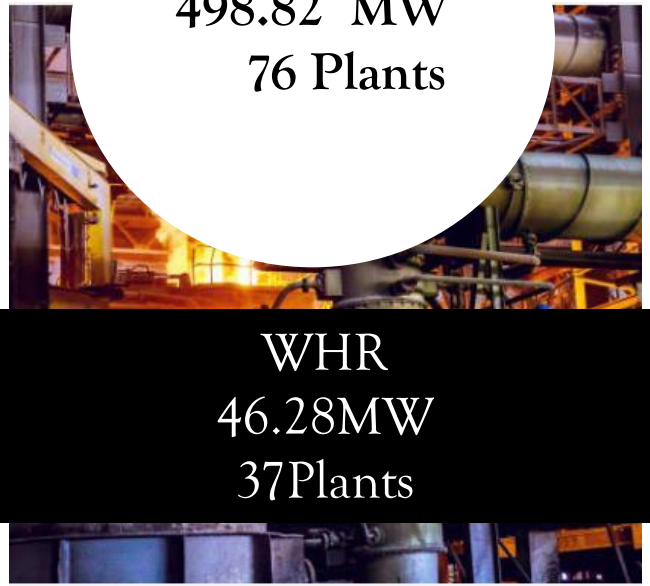

WHR
46.28MW
37Plants

06/REFERENCES

THANKS !

WE ARE ENDEAVORING TO BE BETTER

NANJING TICA THERMAL TECHNOLOGY CO., LTD.
WEBSITE:
WWW.TICAPURECYCLE.COM/WWW.TICACHINA.COM
ADD: NO.6, HENGYE ROAD, ECONOMIC AND TECHNOLOGICAL DEVELOPMENT ZONE, 210046, NANJING, CHINA.

EXERGY INTERNATIONAL SRL
VIA SANTA RITA, 14 21057 OLGIATE OLONA (VA) ITALY
TEL +39 0331 18 17 711 FAX +39 0331 18 17 731
EXERGY-ORC.COM
INFO@EXERGY.IT